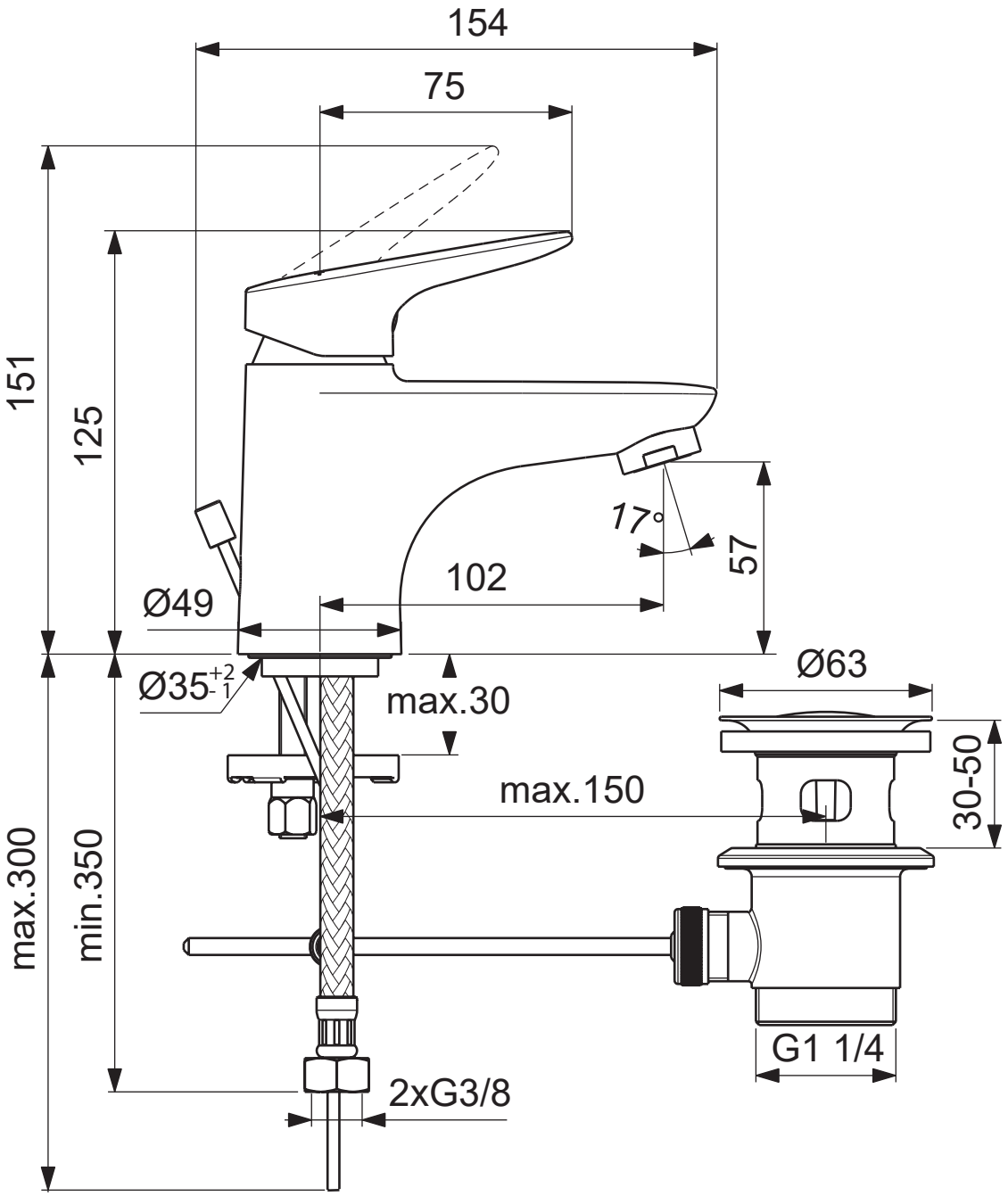
154
75
151
125
17°
57
102
Ø49
Ø35+2 -1
max.30
Ø63
30-50
max.150
max.300
min.350
G1 1/4
2xG3/8

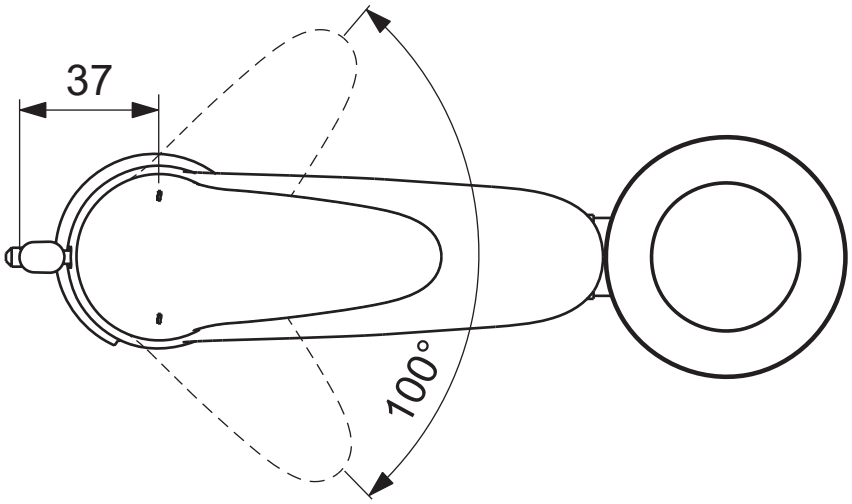
37
100°