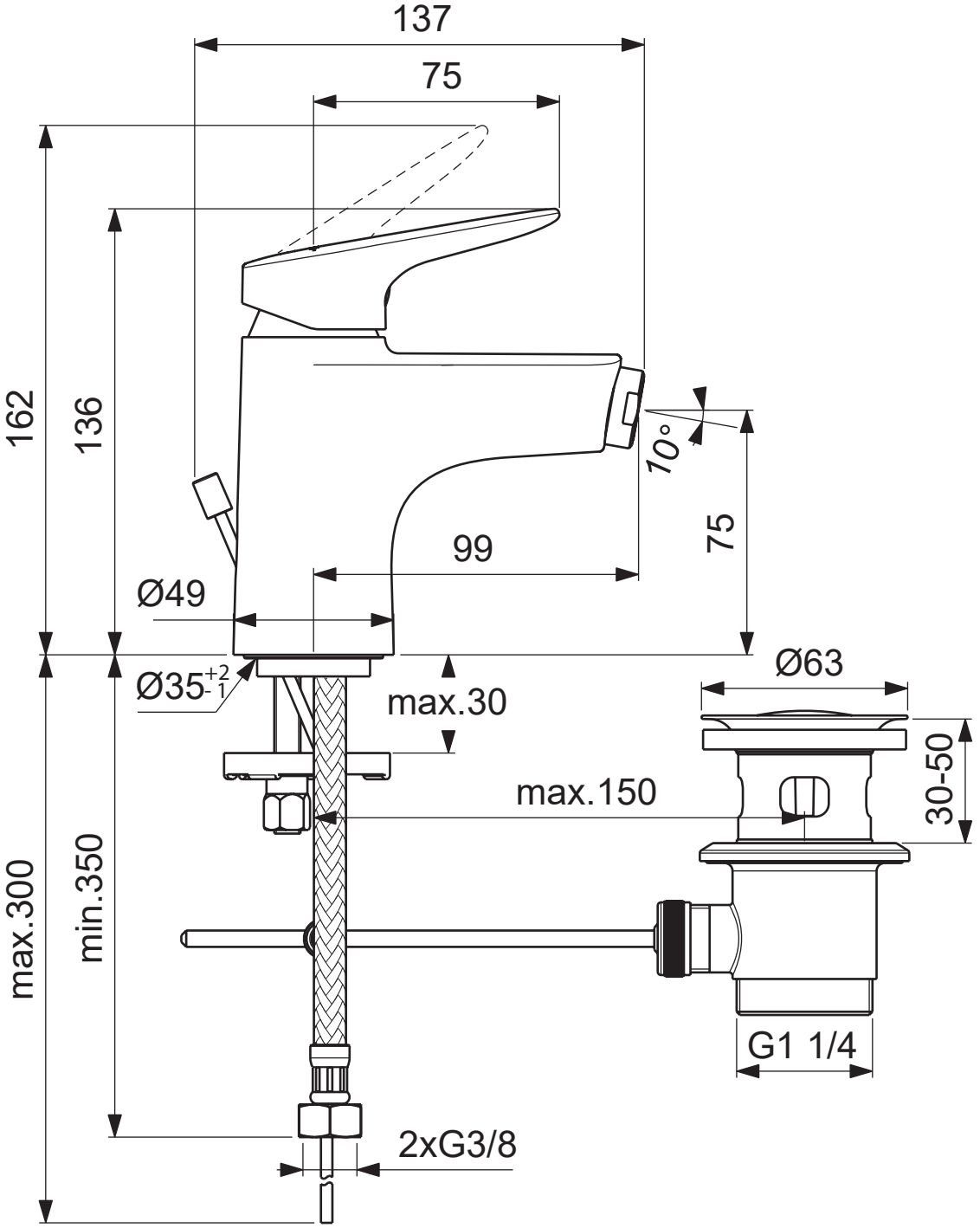
137
75
162
136
10°
75
99
Ø49
Ø35+2-1
max.30
Ø63
30-50
max.150
max.300
min.350
G1 1/4
2xG3/8

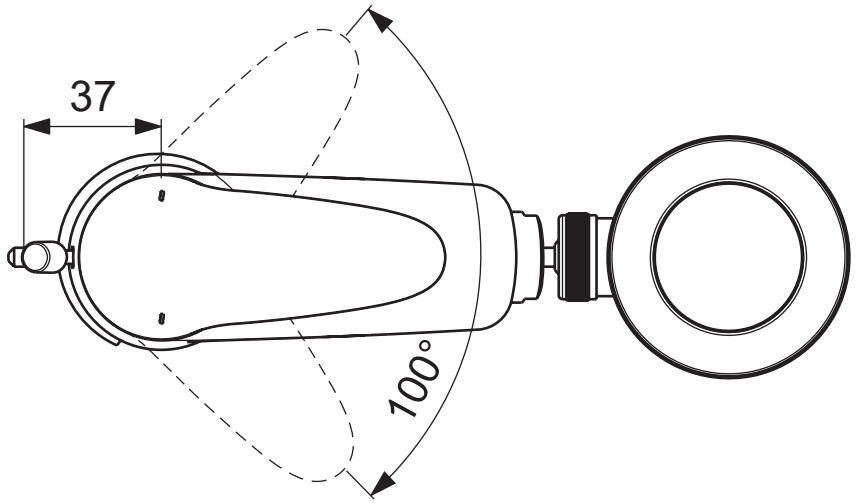
37
100°